REVERSIBLE BRUSHLESS DC RIGHT-ANGLED GEARMOTOR

Model Number:

MMP BL58-412K-90V GRA52-139

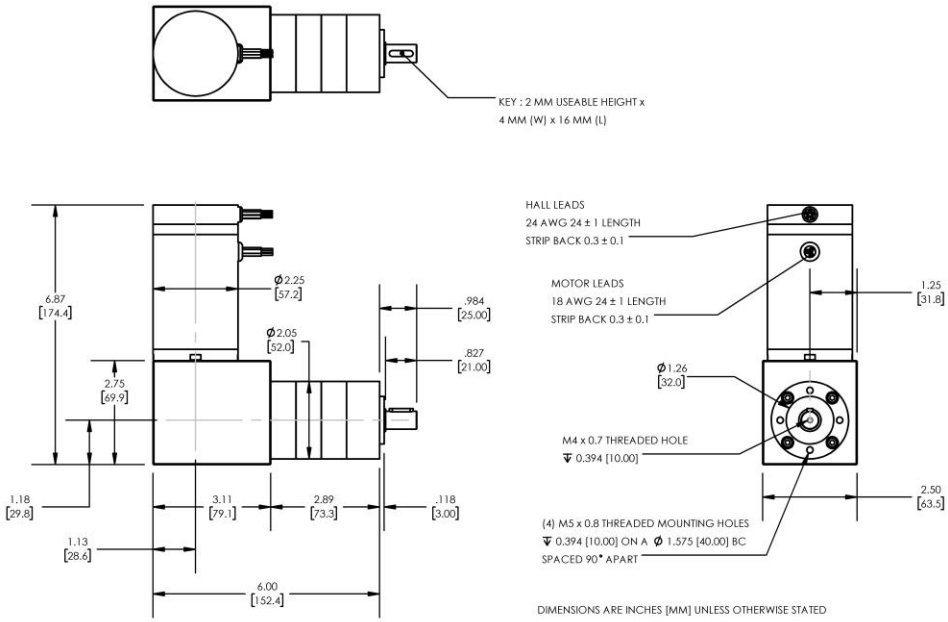

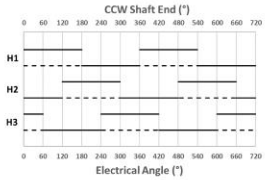

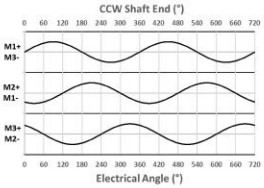

HALL LEADS	
LEAD	COLOR
H1	BLUE
H2	GREY
H3	VIOLET
VCC	RED
GND	BLACK

MOTOR LEADS	
LEAD	COLOR
M1	RED
M2	BLACK
M3	WHITE

ENCODER CABLE FUNCTIONS		
PIN	FUNCTION	COLOR
1	GROUND	BROWN
2	INDEX	VIOLET
3	A CHANNEL	BLUE
4	+5 VDC POWER	ORANGE
5	B CHANNEL	YELLOW

PLANETARY GEARMOTOR OUTPUT PARAMETERS:	VALUE	UNITS	TOLERANCE
Gearhead Ratio (exact)	139.13 : 1		
Gearhead Shaft Output Speed (at full-load)	23	RPM	MAX
Gearmotor Rated Continuous Torque	390	In-Lbs	MAX
Gearmotor Rated Peak Torque	443++	In-Lbs	-----
Gearhead Standard Backlash	48	Arc Minutes	MAX
Gearhead Efficiency	70%	-----	-----
Output Shaft Radial Load Capacity	102	Lbs	MAX
Output Shaft Axial Load Capacity	34	Lbs	MAX
Gearmotor Total Weight	5.7	Lbs	MAX

++ All Peak Torque values are dependent upon duty. Contact our sales office for details.

DC MOTOR PERFORMANCE PARAMETERS:	VALUE	UNITS	TOLERANCE
Rated DC Voltage	90	DC VOLTS	-----
Rated Continuous Current	2.5	AMPERES	-----
No-Load Speed	4478	RPM	MAX
Rated Speed	3191	RPM	+/- 15%
Rated Continuous Power Out	151	WATTS	+/- 15%
Rated Continuous Torque	64	OZ-IN	-----
Peak Torque (motor only)	160	OZ-IN	-----
No-Load Current	0.17	AMPERES	MAX
Back EMF Constant (Ke)	20.1	V/KRPM	+/- 10%
Torque Constant (Kt)	27.2	OZ-IN/AMP	+/- 10%
DC Armature Resistance	10.22	OHMS	+/- 15%
Armature Inductance	6.32	mH	+/- 15%
Armature temperature	155	DEG. C	MAX

NOTES:

- ENCODER & BRAKE OPTIONS AVAILABLE – FOLLOW THIS LINK FOR DETAILS
- NEMA MOUNTING FLANGE OPTION AVAILABLE – FOLLOW THIS LINK FOR DETAILS

MIDWEST MOTION PRODUCTS, INC

DESIGN, MANUFACTURING & DISTRIBUTION - MOTION CONTROL EQUIPMENT

www.midwestmotion.com email: sales@midwestmotion.com